Model B- HP Deflagration Flame Arrester

HP Deflagration Flame Arrester

The Paradox Deflagration Flame Arrester is designed to stop the propagation of deflagration beyond the capabilities of a conventional end-of-line flame arrester. They are ideal for ***short flare stacks*** (<60ft.) with a ninety-degree elbow at the bottom. The deflagration arrester is bi-directional and will stop both low- and high-pressure deflagrations.

All of the sizes 2"through 12" have been individually tested to API 2028 ***in a 60' flare stack*** with a ninety-degree elbow at the bottom. The deflagration arrester is bi-directional and will stop both low- and high-pressure deflagrations as well as "Stable Detonations with low IP.

Like our detonation arresters, they have crimped ribbon with screen sections that allow for much larger cells than that of competitive crimped ribbon arresters, allowing maximum flow with maximum protection and requiring less frequent maintenance due to clogging and greater ease in cleaning when service is required. This translates to less downtime. Our element offers maximum flow to pressure drop characteristics enhancing the value of our product in any system. European flame arrester companies sell similar products that they misleadingly call Detonation arresters with the footnote "Stable Detonation". These products will not stop an Unstable (overdriven detention) and should clearly market that way.

Our unit should only be used for high-pressure deflagrations as directed. They are designed with flanged connections; this Arrestor provides the option of the removal of the flame cell (element) for easy cleaning and replacement without disconnection of the pipe connection flanges. Standard housing construction is carbon steel and is available in stainless steel.

The element is available in 304 S.S and 316 S.S. Drains, pressure taps & Temperature ports are optional.
Special material and protective coatings are available on request.

"Standard burn rating is 15 minutes"

- Available in sizes 2" to 12"
- All sizes have been thoroughly tested with 50 feet of run up pipe and a 90 degree bend.
- Initial Pressure 19.7 Pisa.
- Tested to API-2028 Sect 5 paragraph b.

Paradox Intellectual Properties Inc.
1-352-493-0616 or 1352-493-2111
Copyright 2020
Fax: 1-352-493-4401
email: sales@paradoxintellectual.com
Rev. 8 6-20-2022

Features and Benefits

• ***All Paradox Deflagration Flame Arrestors*** are designed for low & high Pressure deflagrations and are Bi-Directional.

- ***Removable Element*** design allows for easy replacement.
- Available in "Stubby" Style (pic below) or Standard Reducers End Section Styles. (pic above)
- **Outstanding corrosion** and chemical resistance.
- **Optional Drain, *temperature & Pressure ports***.
- **Available in Eccentric & Concentric** end sections.

Paradox's Large Crimp Opening Provide:

- Maximum flow
- Less Pressure Drop
- Easy Cleaning
- Less Clogging
- Less Maintenance
- Bi-directional Design
- Available in ANSI, DIN and JIS flanges.

Material Specifications

Housing	Cell	Gas Group
Carbon Steel 304 SS 316L SS Hastelloy	304 SS 316 SS Hastelloy	NEC Group "D" IEC "IIA"

Paradox Intellectual Properties Inc.
1-352-493-0616 or 1352-493-2111
Rev. 8 6-20-2022
Copyright 2020
Fax: 1-352-493-4401
email: sales@paradoxintellectual.com

Deflagration Flame Arresters, Series-B

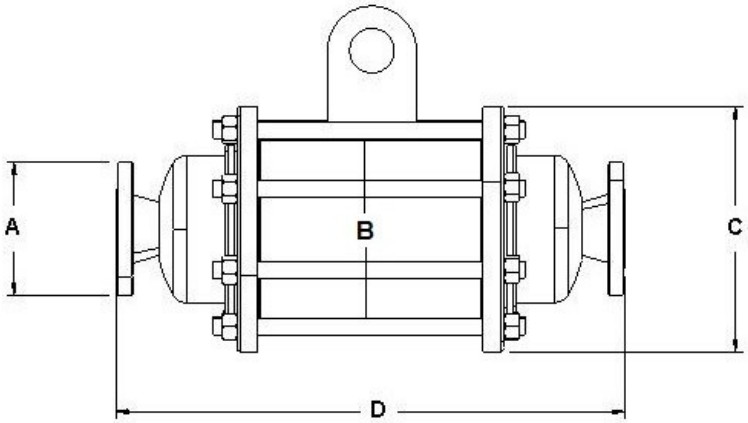

Detonation Flame arrester Specifications

Model	A 150# ANSIConn. Size in. (mm)	B Housing Size In. (mm)	C Outside Diam-eter In. (mm)	D Overall Length In. (mm)	Approx. Weight Lb.(Kg.) Grp D +/-10%
B-2C	2 (50)	8 (200)	11 (279)	22.5(571.5)	135 (61)
B-3C	3 (75)	8 (200)	11 (279)	22.5(571.5)	145(65)
B-4C	4 (100)	8 (200)	11 (279)	24 (609)	160 (72)
B-6C	6 (150)	12 (300)	16.00 (406)	30.39 (771.9)	355 (161)
B-8C	8 (200)	18.5 (470)	23.5 (597)	38 (965)	645 (292)
B-10C	10 (250)	22.5 (571.5)	27.5 (698)	42 (1067)	960 (435)
B-12C	12 (300)	26.5(673)	32.0 (813)	43.34 (1101)	1200 (544)

Model B- HP Deflagration Flame Arrester for Group D, Gas

Flame Arrester Type	**In-line, Bi- Directional, High Pressure, Deflagration Flame Arrester**
Recommended installation /use	Vertically or Horizontally in a Piping systems with up to 60' plus 1, 90° Elbow. (For example; a 60 foot flare stack with 90° Elbow at the base and the flame arrester immediately before the elbow).
Design/Test Standard/Test Gas	Propane/Tested to API-2028 Sect 5 paragraph b.
Connection sizes	2" through 12" Pipe sizes.
Type of connection	Flanged connection.
Flange ratings	Available in ASME 150# Raised Faced Flange
Housing Materials	Standard Model; Carbon Steel, also available in 304, 316L & most other Austenitic metal or hastelloy.
Element Type/Material	The element is crimped metal ribbon made from 304 Stainless Steel and is also available in 316L or hastelloy.
Maximum Initial pressure	Initial Pressure 19.7 Pisa.
Operating temperature range	-17ºC to +60ºC
Hydrostatic Test Pressure	350 Psig.
Gas Group Application Rating	NEC Group D,(IEC Group IIA)
BURN RATING	15 minutes Stabilized Burn, as per Type II USCG rating. Test per 33 CFR